RCYJ – Cast Resin Parallel Branch Joint

Developed for application in branching-off single-core cables or conductors. For example conductors for cathodic corrosion protection from chemical and electrochemical reactions underground and water. Pipes, warehouse containers, electric supply lines and other metal constructions are effectively protected against passive corrosion.

Products Dimensions

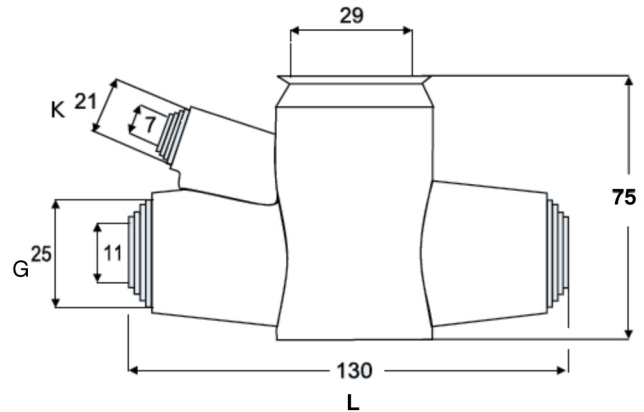

Product Part Number		Main Cable Number of Core x	Branch Cable Number of Core x	Product Dimensions			
with RCGA	with RCGA-B	Nominal cross-section mmsq.	Nominal cross-section mmsq.	L	H	G	K
RCYJ-A	RCYJ-B	1 x 10 to 1 x 70	1 x 4 to 1 x 70	130	75	25	21